Basic Computer Knowledge

Q1: IC is made up of _____

A) **Transistors** B) Microprocessors C) Vaccum Tubes

D) Both A) and B) E) None of the above

Q2: Time sharing became possible in _____ generation of computers.

A) First B) **Second** C) Third D) Fourth

E) None Of the above

Q3: The first generation computers used ……. languages.

A) Machine B) **Assembly** C) Both A) and B) D) High-level

E) None Of The Above

Q4: Which of the following refers to the fastest, biggest and most expensive computer?

A) Notebooks B) Personal Computers C) Laptops

D) **Supercomputer** E) P D A'S

Q5: Which language is directly understood by the computer without a translation program?

A) B A S I C language B) Assembly Language C) High-Level language D) C language E) **Machine Language** F) None of these

Q6: Which of the following options correctly express the meaning of the term 'PC'?

A) Independent computers for all working staff.

B) **Personal computers widely available to individual workers with which they can access information from layer systems and increase their personal productivity**.

C) Packed computer systems formed by joining together of various computer terminals.

D) Computer manufactured by the Pentium Company.

E) None of the above.

Part B

Q1: Which of the following is the smallest and fastest computer imitating brain working?

A) Supercomputer B) **Quantum Computer** C) Param – 10000
D) I B M chips E) None of the above

Q2: Name the first general-purpose electronic computer.

A) A D V A C B) A D S A C C) **U N I V A C**
D) E D V A C E) None of the above

Q3: A hybrid computer is the one having the combined properties of?

A) Super and microcomputers B) mini and microcomputers C) **Analog and digital computers** D) super and minicomputers E) None of the above

Q4: Which of the following uses a handheld operating system?

A) A supercomputer B) A personal computer C) A laptop D) A mainframe E) **A P.D.A.**

Q5: The user generally applies … to access mainframe or supercomputer.

A) **Terminal** B) Node C) Desktop D) Handheld E) None of the above

Q6: Microcomputer hardware consists of three basic categories of physical equipment.

A) Keyboard, monitor, hard drive.

B) **System unit, input/ output, memory**.

C) System unit, input/ output, secondary storage.

D) System unit, primary storage, secondary storage.

Q7: Which of the following is the fastest type of computer?

A) Laptop B) Notebook C) Personal computer D) Work Station E) **Supercomputer**

Part C

Q1: Which is not an integral part of the computer?

A) C P U B) Mouse C) Monitor D) **U P S** E) None of the above

Q2: Microprocessors can be used to make

A) Computer B) Digital system C) Calculators D) **All of these** E) None of these

Q3: 'C' in C P U denotes

A) Common B) **Central**

C) Convenient D) Computer E) Circuitry

Q4: The communication line between C P U memory and peripherals is called a?

A) **Bus** B) Line C) Media D) All of the above E) None of these

Q5: The control unit controls other units by generating?

A) **Control Signals** B) Timing Signal C) Transfer Signal D) Command Signal E) None of the above

Generations of Computers

A computer is basically an electronic machine that can process information. However, the "process" could be anything. For example, it could be the addition or any other arithmetic operation. Otherwise, it could be just the instruction to group a given set of data or to ungroup it. Today's computers have the power to carry out billions of calculations in a second and return results that are very accurate and reliable. How did it all happen? Where did it all start?

The computers of today find their roots in the second half of the twentieth century. Later as time progressed, we saw many technological improvements in physics and electronics. This has eventually led to revolutionary developments in the hardware and software of computers. In

other words, soon the computer started to evolve. Each such technological advancement marks a generation of computers. Let us begin with the first one.

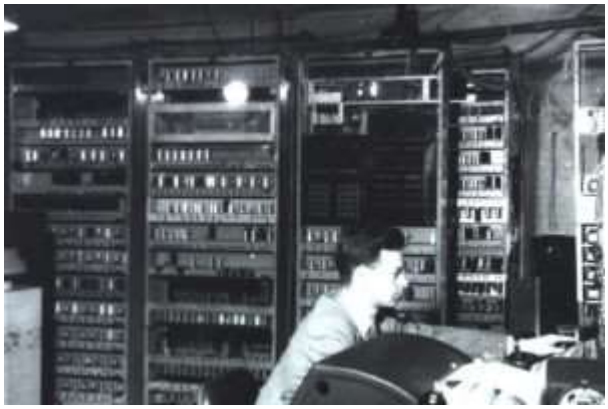

First Generation Of Computers

Computers developed between 1946 – 1959, are the first generation of computers. They were large and limited to basic calculations. They consisted of large devices like the vacuum tubes. The input method of these computers was a machine language known as the 1GL or the first generation language. The physical methods of using punch cards, paper tape, and magnetic tape were used to enter data into these computers.

Examples of the first generation computers include ENIAC, EDVAC, UNIVAC, IBM-701, and IBM-650. These computers were large and very unreliable. They would heat up and frequently shut down and could only be used for very basic computations.

Second Generation Of Computers

Computers developed between 1959-1965 the second generation computers. These computers were more reliable and in place of vacuum tubes, used transistors. This made them far more compact than the first generation computers. The input for these computers were higher level languages like COBOL, FORTRAN etc. In these computers, primary memory was stored on the magnetic cores and magnetic tape and they used magnetic disks as secondary storage devices.

Examples of the second generation computers include IBM 1620, IBM 7094, CDC 1604, CDC 3600, UNIVAC 1108. As a result, they worked on AC and therefore were faster than their predecessors.

Third Generation Of Computers

Computers developed during the period of 1965 – 1971, the third generation of computers. These computers differed from the first and the second generations simply by the fact that a new circuit element like IC's (Integrated Circuits) was used. An integrated circuit is a small device

that can contain thousands and thousands of devices like transistors, resistances and other circuit elements that make up a computer. Jack Kilby is credited with the invention of the Integrated Circuit or the IC chips. With the invention of IC's, it became possible to fit thousands of circuit elements into a small region and hence the size of the computers eventually became smaller and smaller.

Another salient feature of these computers was that they were much more reliable and consumed far less power. The input languages for such computers were COBOL, FORTRAN-II up to FORTRAN-IV, PASCAL, ALGOL-68, BASIC, etc. These languages were much better and could represent more information. Consequently more and more complex calculations are possible

Examples of the third generation computers include IBM-360 series, Honeywell-6000 series, PDP (Personal Data Processor), and IBM-370/168.

Fourth Generation Of Computers

Fourth Generation of computers was between 1971 – 1980. These computers used the VLSI technology or the Very Large Scale Integrated (VLSI) circuits technology. Therefore they were also known as the microprocessors. Intel was the first company to develop a microprocessor. The first "personal computer" or PC developed by IBM, belonged to this generation. VLSI circuits had almost about 5000 transistors on a very small chip and were capable of performing many high-level tasks and computations. These computers were thus very compact and thereby required a small amount of electricity to run.

Examples are STAR 1000, CRAY-X-MP(Super Computer), DEC 10, PDP 11, CRAY-1. This generation of computers had the first "supercomputers" that could perform many calculations accurately. They were also used in networking and also used higher and more complicated languages as their inputs. The computer languages like languages like C, C+, C++, DBASE etc. were the input for these computers.

Fifth Generation Of Computers

This is the present generation of computers and is the most advanced one. The generation began somewhere around 1981 and is the present generation of computers. The methods of input include the modern high-level languages like Python, R, C#, Java etc. These are extremely reliable and employ the ULSI or the Ultra Large Scale Integration technology. These computers are at the frontiers of the modern scientific calculations and are used to develop the Artificial Intelligence or AI components that will have the ability to think for themselves.

Examples include: Intel P 4, i 3 – i10, AMD Athlon, etc.

Check Your Awareness

Q 1: The language used in ENIAC:

A) C B) C++ C) 1 GL D) Python

Ans: Basically ENIAC was a first generation computer and therefore the correct option is 1 GL.

Q 2: Which among these will have VLSI?

A) DEC 10 B) PDP 11 C) CRAY-1 D) All of these.

Ans: Earlier VLSI or the very large scale integration was employed in the fourth generation of computers. All of these above examples are from the fourth generation and therefore the answer is D.

Practice Questions

Q 1: You can use Java in which of these following generations:

A) Second

B) Third

C) Fourth

D) Fifth

Ans: D is the correct option.

Q 2: The ULSI technology is present in which generation of computers:

A) Third

B) First

C) Fourth

D) Fifth

Ans: D is the correct option.

Computer organization

The questions from computer organization usually test the basic knowledge that one acquires at the beginning of computer learning. It also tests the knowledge of candidates on various computer parts and their functioning. The computer system is formed when 2-3 parts combine and perform individually as well as coherently.

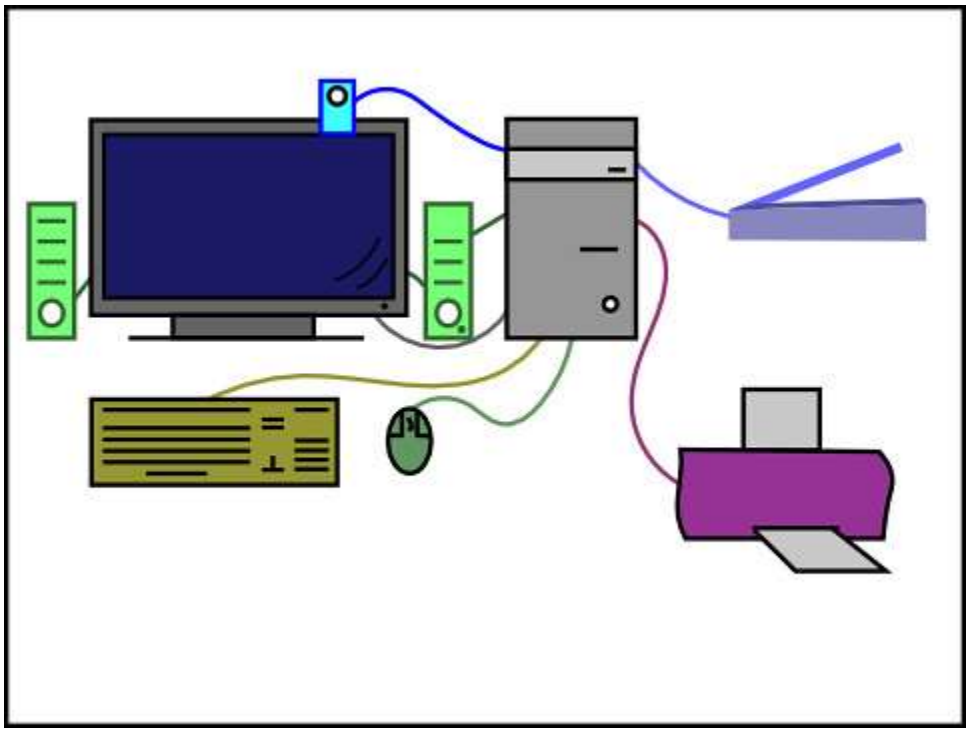

Source: Flickr

The computer consists of many different parts of input units, output units, memory units, etc. And we will discuss with you in detail about each of these parts.

Output units

Output units allow the computers to send the data to other users. Usually, a display device is considered as the output unit because it displays the texts, graphics, and other information. The common examples of output units are speakers, monitors, printers, etc.

Input units

The devices that are used to convey the information to the computer are called input devices. The primary examples of input units are a keyboard, pointing devices, audio/video devices, etc. With the help of input unit, a user can transfer the data to a computer for storing, displaying and processing data.

Some of the functions of input devices:

1. Pointing devices: This will allow you to point to the software on the computer and open it. It will interact with the graphical interface.
2. Keyboard: It will send the various alphanumeric data into the computer.
3. Audio/video devices: It will allow you to input the sound and pictures into the computer.

CPU

CPU is known as the brains of the computer. Without CPU a computer cannot work. It allows the computer to interpret and execute the various data through software and hardware. There are three various functioning of CPU. They are:

1. Memory unit
2. Arithmetic-logic unit
3. Control unit

Solved Questions – Type I

Q. Which of the following device is the example of a trackball?

A. Output device B. Printing device

C. Programming device D. Pointing device

Ans: The trackball is used in mouse and therefore is an example of a pointing device. The correct answer is D

Q. Out of the given options which term is related to the printer?

A. Cartridge B. Keyboard

C. DVD D. None of these

Ans: The cartridge is related to printer. An inkjet cartridge or ink cartridge is a component of the ink printer that has ink used on paper during printing. The correct answer is A.

Q. =Sum (D4: D10) is an example of

A. Cell address B. Formula

C. Function D. Value

Ans: This is an example of formula. It is used in excel to get the sum of the required range. The correct answer is B.

Solved Questions – Type II

Q. Pokemon Go app, which became very popular in 2016 and made people wander around their towns so that they can collect pokemon to score points which confine the game by interacting with the characters, and then making progress in virtual environments by going to real-life places. What type of technology was related to the game?

A. Artificial Intelligence B. Sleeker

C. Virtual Reality D. Augmented Reality

Ans: The correct answer is D Augmented Reality is a type of technology that can superimpose a virtually created image on a user's view of the original world.

Q. Whose main purpose out of the following is to stop the unauthorized access to the computer via the internet?

A. Firewall B. Spyware blocker

C. Popup blocker D. None of these

Ans: A firewall can act as a barrier between the untrusted and trusted network. It keeps in check the access by controlling through a positive control model. This ensures that only trusted traffic is allowed on the network which is pre-defined by the firewall policy; other traffics are denied. These firewalls can be implemented in software as well as hardware and combination of both. The correct answer is A.

Q. In advertising like entities in order to facilitate mail to many addresses, which is the system that is used to automatically add the addresses and names from a database like letters and envelops?

A. cc B. Bcc

C. Mail merge D. New

Ans: Through mail merge, you can create multiple documents at once. All these documents will then have the same text, graphics, layout, and formatting. Specific sections can vary and can be personalized. The correct answer is C.

Practice Questions

Q. _____ menu is also known as the drop-down menu.

A. cascading B. Pull-down

C. Fly-out D. Pop-up

Answer: B

Q. The first microprocessors that were developed by Texas Instruments and Intel Corp. were mainly used to control small _____.

A. Calculators B. Microwave ovens

C. Robotics D. Personal Computer

Answer: A

Q. Out of the following which printer uses a combination of electrophotographic and laser-beam techniques?

A. Daisy wheel B. Dot-matrix

C. laser D. None of these

Answer: C

Q. What is the process of writing down computer instructions known as?

A. assembling B. coding

C. executing D. Compiling

Answer: B

Q. Name the system from the following that can adjust and learn on its own as per the circumstances.

A. Neutral networks B. Geographical systems

C. File-based systems D. Database management system

Answer: A

Computer Memory

What is computer memory?

Computer memory is one of the most important parts of the computer. It stores and allows users to access the data anytime, anywhere they want. There are two types of computer memories.

- Volatile memory and
- Non-volatile memory.

Volatile memory is termed as RAM which stands for Random access memory. While non-volatile stands for ROM which is an acronym for Read-only memory. Computer memory is based on the two factors that include access time and capacity. The faster the speed of the memory is the lesser will be the access time. A computer uses the memory which is organized in such a way that it enables largest capacity of the memory and the faster speed.

Basic Computer Terminologies

1. CPU

CPU means ‘Central Processing Unit’. This is the place of computer data handling. Moreover, it does all the data manipulation, calculations and formatting data for output. Hence, whenever someone buys a computer he/she becomes more conscious about the CPU and its capabilities.

The execution of the instructions within the computer system is very fast. It measures it in cycles of time and refers it to as megahertz. That's why the 'Mhz' of a computer's processor is sometimes referred to as the clock speed. Think about CPUs (and aligned circuitry) beating like a heart, this pulsing/beating is expressed as "MHz" e.g. 2000Mhz.2. RAM

Specifically, RAM stands for "Random Access Memory" or "Ready Access Memory". It is a temporary notepad where your computer sends information to disk, or to the storage place of instructions from other input devices. The term "random access" indicates that memory locations in RAM are accessible in any order unlike sequential access of a data cassette tape.

3. Hard-disk Drive

Your computers hard disk drive is like an audio CD that you possess at home – except your computer can read and write to it. In other words, your computer can take data from your hard drive (to process it in the CPU or place it in RAM to work with).Also, it can record the results of the work it does back to the disk, which is "writing to disk". The abbreviation HDD stands for "hard disk drive.

If you open your HDD, you would find a pancake stack on double-sided disks.

4. Floppy Disk

You can also read and write data in a floppy disk. Simply, it is smaller than HDD and portable – you can take it to another computer and read from it there also. Floppy disks are sometimes called "secondary storage devices". They were known as 'floppy' originally because they were 5¼ inches in width and floppy. They could carry almost 720kb of data. Today, however floppy disks are smaller, rigid, and can carry more data like 1.44Mb.

5. Hardware

Hardware is the term referring to all the physical parts in a computer system. It includes the monitor, the keyboard, the mouse, the main case which stores the RAM, CPU and the motherboard.

6. Software

‘Software’ is the term which refers to the instructions needed to make a computer work. It is intangible in nature. The software is also known as a “program”. Also, it is a set of computer files which are used to perform various actions on the computer. You can have a program for ‘word processing’. The software can be transferred to a compact disk and floppy disks, but usually, the software is stored in hard disk.

Question on Basic Computer Terminology

Question: Define the term ‘Operating System’.

Answer: Every computer requires a set of programs known as the ‘operating system’ to run the system and make all the other programs work. Your word processor, database or spreadsheet programs cannot work unless the operating system is there in the pc. Programs written for one specific operating system cannot work on another operating system.

Types of Memory

In computer terms, memory is divided into two categories:
1) Main memory or primary memory
2) Auxiliary memory or secondary memory

Main memory or primary memory

The main memory unit that connects directly to the CPU is the primary memory. Further, there are two types of primary memory i.e RAM and ROM

1. Random Access Memory

RAM is also known as the volatile memory. It is in the form of the chip that is implemented with the use os semiconductors. Generally, RAM is used to store temporary storage of output data, input data, and intermediate results. RAM can be divided into two categories:

1. Static RAM or SRAM
2. Dynamic Ram or DRAM

2. Read-only memory

ROM is not as accessible as RAM and is, therefore, non-volatile memory. Once a ROM chip is programmed it cannot be rewritten or programmed. The only changes you can make in ROM is at the time of manufacturing. ROM has three categories which are:

1. Programmable ROM or PROM
2. Electrically Erasable Programmable ROM or EEPROM
3. Erasable Programmable ROM or EPROM

Auxiliary memory or secondary memory

Secondary memory is a permanent storage device. It is non-volatile in nature and is used to store programs and data when they are not being processed. Because of this, the data remains in the same stage as long as they are not deleted or rewritten from the user’s end. A secondary memory includes devices such as:

1. Optical disks like DVD, CD, and Blue-ray disks
2. Magnetic disks like memory stick, floppy disk, and hard disk drive.
3. Solid state disks like the thumb drive, pen, and flash.

Along with this one may also ask units and measurements as to how memory in computers is measured. We all use a hard disk and a pen drive to transfer the data from one place to another.

But what are its units? Computer measures data in many forms such as Megabyte, Kilobyte, Byte, Bit, Nibble, Terabyte, Gigabyte, Exabyte, Petabyte, and many more.

Here are the conversions of these data into one form or another:
8 Bits 1 Byte
Bytes (1024) KiloByte (1KB)
KB (1024) MegaByte (1MB)
MB (1024) GigaByte (1GB)
GB (1024) TeraByte (1TB)
TB (1024) PetaByte (1PB)
PB (1024) ExaByte (1EB)
EB (1024) ZettaByte (1ZB)
ZB (1024) YottaByte (1YB)
1 YB BrontoByte
1024 BrontoByte 1 GeopByte
In computer memory, bits is the smallest memory. While Geopbyte is the highest memory. 1 bit is the binary unit.

Abbreviations

EDO Extended data out
EGA Exterior gateway protocol or enhanced graphics array
DVR digital video recorder
EDSAC Electronic delay storage automatic calculator
EBCDIC Extended binary coded decimal interchange code

Practice Questions

Q. Of what unit is a memory a part of?
A. Input device B. Output device
C. Control unit D. Central processing unit
Answer: D
Q. _____ is used to represent a character of information.
A. Field B. Bit
C. Byte D. Attribute
Answer: C
Q. Out of the following area _____ holds the information temporarily as the computer processes the information in the storage area of the computer itself.
A. Control unit B. ROM
C. Hard disk D. Main memory
Answer: B
Q. What will happen when the memory chip is volatile?
A. Explodes due to high temperatures B. Used for data storage
C. Loss of content due to loss of current D. Used to write and read data
Answer: C

Q. RAM is located in _____
A. Motherboard B. Extension board
C. External Drive D. None of the above
Answer: A

Practice Questions for You

Q: The principle of modern computers was proposed by ____
a. Steve Jobs
b. Adam Osborne
c. Alan Turing
d. Charles Babbage
Ans: The correct answer is C.
Q: Who introduced the first computer form home use in 1981?
a. IMB
b. Apple
c. Microsoft
d. Sun Technology
Ans: Answer is A. IBM made the first home use personal computer.
Q: Third generation computers used which programming language?
a. Java
b. Machine language
c. FORTRAN
d. C and C++
Ans: The correct option is D.

Computer Abbreviations

A to E

AI	Artificial Intelligence
ALGOL	Algorithmic Language
ASCII	American Standard Code for Information Interchange
BCC	Blind Carbon Copy
BINAC	Binary Automatic Computer
BIOS	Basic Input Output System
CC	Carbon Copy (on emails)
CAD	Computer Aid Design

CDROM	Compact Disc Read Only Memory
COBOL	Common Business Oriented Language
DBMS	Database Management System
DBA	Database Admin
DNS	Domain Name System
DVD	Digital Versatile Disk
e-Commerce	Electronic Commerce
EBCDIC	Extended Binary Coded Decimal Interchange Code
EPROM	Erasable Programmable Read Only Memory
EXE	Executable

F to L

FAX	Far Away Xerox
FORTRAN	Formula Translation
FS	File System
FTP	File Transfer Protocols
GIF	Graphics Interchange Format
GB	Gigabyte
GSM	Global System for Mobile Communication

HTTP	Hyper Text Transfer Protocol
HTML	Hyper Text Markup Language
ISP	Internet Service Provider
IMAP	Internet Message Access Protocol
JPEG	Joint Photographic Experts Group
KB	Kilobyte
LED	Light Emitting Diode

M to R

MB	Megabyte
MMS	Multimedia Message Service
MPEG	Moving Picture Experts Group
MIPS	Million Instructions Per Second
MICR	Magnetic Ink Character Read
NOS	Network Operating System
PC	Personal Computer
PDF	Portable Document Format
PAN	Personal Area Networks
PPP	Point to Point Protocols

PROM	Programmable Read Only Memory
PING	Packet Internet Gopher
RDBMS	Relational Data Base Management System
RAM	Random Access Memory
ROM	Read Only Memory
RIP	Routing Information Protocol

S to Z

SQL	Structured Query Language
SRAM	Static Random Access Memory
SMTP	Simple Mail Transfer Protocol
SIM	Subscriber Identification Module
TCP	Transmission Control Protocol
TCPIP	Transmission Control Protocol Internet Protocol
TB	Terabytes
URL	Uniform Resource Locator
URI	Uniform Resource Identifier
USB	Universal Serial Bus

VDU	Visual Display Unit
VGA	Video Graphics Array
WWW	World Wide Web
WiFi	Wireless Fidelity
WPA	Wi-Fi Protected Access
WLAN	Wireless Local Area Network
WORM	Write Once Read Many
ZB	Zettabyte

Practice Questions for You

Q: PPP is the computer abbreviation for Point to Point protocol and also _____

a. peer to peer protocol
b. point to peer protocol
c. peer to point protocol
d. none of the above

Ans: A

Q: What does RTF stand for?

a. Rich Text Form
b. Random Text Format
c. Rich Text Format
d. None of the above

Ans: C

Q: What is the abbreviation for Software?

a. SS
b. SO
c. SA
d. SW

Ans: D

Keyboard Shortcuts

Keys	Functions
CTRL + F	Use this to search some word
CTRL + ESC	list of the task (Start)
ALT + ESC	use this to move from window to window
CTRL + END	us to move to the end of file
CTRL + F5	For thumbnail file window

ALT + SHIFT for switching between languages
CTRL + U the line under the text
CTRL + X Cut
CTRL + C Copy
CTRL + Z Undo
CTRL + V Paste
CTRL + A Select all
ALT + S for formatting list
CTRL + ENTER starts a new page
CTRL + F6 used for moving between files
CTRL + F2 for previewing the page before printing
SHIFT + F10 digital and bullets
ALT + ENTER for repeating the last process
ALT + TAB used when many windows are open and you need to choose the required window
CTRL + END Latest document
SHIFT + F1 information about the type of coordination
CTRL + ISlash
F12 Save As
SHIFT + F12 Save the file
CTRL + H Replacement
CTRL + B black line
[+ ALT List Table
CTRL + S for saving the work done
ALT + F4 useful for closing the windows
CTRL + K Document Format
CTRL + P Print
CTRL + F4 Exit from the file
CTRL + N New File
CTRL + O open area
CTRL + E Center text
ALT + J Help Menu
Ctrl + 1 Used in opening the format cell window
Ctrl + A For selecting all the content
Ctrl + B makes the selected content bold
Ctrl + U underlines the content selected
Ctrl + K inserts the link
Ctrl + P used for opening the print window
Ctrl + S saves the worksheet
Ctrl + ; for entering the current date
Alt + = for creating a formula to sum the above cells
Ctrl + F10 maximizes the current window
Ctrl + F6 For switching between two opened workbooks.
Ctrl + Shift + ; for entering the current Time
Ctrl + I makes the selected content Italic
Ctrl + Home for moving the cell A1
Ctrl + Page Down for moving between the two opened worksheets
Alt + Shift + F1 used for adding a new worksheet
Ctrl + Z to undo the action
Ctrl + F3 opens the excel name manager
Ctrl + F9 minimizes the current window
Shift + F3 for opening the excel formula window

Shift + F5	opens the search box.
F2	edits the selected cell.
F3	used for pasting names after creating the name
F4	for repeat action
F5	for going to specific cell
F7	for checking the spelling for selected text

Practice Questions on Keyboard shortcuts

Q. Which key is used as a shortcut for opening a new window document?
A. Ctrl + S
B. Ctrl + F
C. Ctrl + N
D. Ctrl + T
Answer: C. Ctrl + N

Solved Questions – Type I

Q. Which of the following device is the example of a trackball?
A. Output device B. Printing device
C. Programming device D. Pointing device
Ans: The trackball is used in mouse and therefore is an example of a pointing device. The correct answer is D
Q. Out of the given options which term is related to the printer?
A. Cartridge B. Keyboard
C. DVD D. None of these
Ans: The cartridge is related to printer. An inkjet cartridge or ink cartridge is a component of the ink printer that has ink used on paper during printing. The correct answer is A.
Q. =Sum (D4: D10) is an example of
A. Cell address B. Formula
C. Function D. Value
Ans: This is an example of function. It is used in excel to get the sum of the required range. The correct answer is C.

Solved Questions – Type II

Q. Pokemon Go app, which became very popular in 2016 and made people wander around their towns so that they can collect pokemon to score points which confine the game by interacting with the characters, and then making progress in virtual environments by going to real-life places. What type of technology was related to the game?
A. Artificial Intelligence B. Sleeker
C. Virtual Reality D. Augmented Reality
Ans: The correct answer is D Augmented Reality is a type of technology that can superimpose a virtually created image on a user's view of the original world.
Q. Whose main purpose out of the following is to stop the unauthorized access to the computer via the internet?
A. Firewall B. Spyware blocker
C. Popup blocker D. None of these
Ans: A firewall can act as a barrier between the untrusted and trusted network. It keeps in check the access by controlling through a positive control model. This ensures that only trusted traffic is allowed on the network which is pre-defined by the firewall policy; other traffics are denied. These firewalls can be implemented in software as well as hardware and combination of both. The correct answer is A.

Q. In advertising like entities in order to facilitate mail to many addresses, which is the system that is used to automatically add the addresses and names from a database like letters and envelops?
A. cc B. Bcc
C. Mail merge D. New
Ans: Through mail merge, you can create multiple documents at once. All these documents will then have the same text, graphics, layout, and formatting. Specific sections can vary and can be personalized. The correct answer is C.

Practice Questions

Q. _____ menu is also known as the drop-down menu.
A. cascading B. Pull-down
C. Fly-out D. Pop-up
Answer: B
Q. The first microprocessors that were developed by Texas Instruments and Intel Corp. were mainly used to control small _____.
A. Calculators B. Microwave ovens
C. Robotics D. Personal Computer
Answer: A
Q. Out of the following which printer uses a combination of electrophotographic and laser-beam techniques?
A. Daisy wheel B. Dot-matrix
C. laser D. None of these
Answer: C
Q. What is the process of writing down computer instructions known as?
A. assembling B. coding
C. executing D. Compiling
Answer: B
Q. Name the system from the following that can adjust and learn on its own as per the circumstances.
A. Neutral networks B. Geographical systems
C. File-based systems D. Database management system
Answer: A

Computer Languages

The user of a computer must be able to communicate with it. That means, he must be able to give the computer commands and understand the output that the computer generates. This is possible due to the invention of computer languages.
Basically, there are two main categories of computer languages, namely Low Level Language and High Level Language. Let us take a brief look at both these types of computer languages.

1] Low Level Languages

Low level languages are the basic computer instructions or better known as machine codes. A computer cannot understand any instruction given to it by the user in English or any other high level language. These low level languages are very easily understandable by the machine.

The main function of low level languages is to interact with the hardware of the computer. They help in operating, syncing and managing all the hardware and system components of the computer. They handle all the instructions which form the architecture of the hardware systems.

Machine Language

This is one of the most basic low level languages. The language was first developed to interact with the first generation computers. It is written in binary code or machine code, which means it basically comprises of only two digits – 1 and 0.

Assembly Language

This is the second generation programming language. It is a development on the machine language, where instead of using only numbers, we use English words, names, and symbols. It is the most basic computer language necessary for any processor.

2] High Level Language

When we talk about high level languages, these are programming languages. Some prominent examples are PASCAL, FORTRAN, C++ etc.

The important feature about such high level languages is that they allow the programmer to write programs for all types of computers and systems. Every instruction in high level language is converted to machine language for the computer to comprehend.

Scripting Languages

Scripting languages or scripts are essentially programming languages. These languages employ a high level construct which allows it to interpret and execute one command at a time.

Scripting languages are easier to learn and execute than compiled languages. Some examples are AppleScript, JavaScript, Pearl etc.

Object-Oriented Languages

These are high level languages that focus on the ‘objects’ rather than the ‘actions’. To accomplish this, the focus will be on data than logic.

The reasoning behind is that the programmers really cares about the object they wish to manipulate rather than the logic needed to manipulate them. Some examples include Java, C+, C++, Python, Swift etc.

Procedural Programming Language

This is a type of programming language that has well structured steps and complex procedures within its programming to compose a complete program.

It has a systematic order functions and commands to complete a task or a program. FORTRAN, ALGOL, BASIC, COBOL are some examples.

Practice Questions for You

Q: Which was the first computer language for an electronic device?

a. Machine Language

b. Assembly Language
c. Short Code
d. FORTRAN
Ans: C

Q: Visual Basic (VB) was derived from which of the following?

a. BASIC
b. ALGOL
c. PERL
d. C++
Ans: A

Q: FORTRAN was developed at ____?

a. Apple
b. Sun Technology
c. IBM
d. Intel
Ans: C

Basic Internet Knowledge and Protocols

In this day and age, everything is digitalized. Technology has made our lives so much simpler and faster. And of the biggest contributing factor of this has been the development of the internet. Even from an IBPS, bank exam point of view, studying the Basic Internet Knowledge and Protocols is important. So let us get started.

Basic Internet Knowledge and Protocols

What is the Internet?

We always associate the internet with the web. But essentially the internet is just a massive networking infrastructure that connects millions of users and devices from across the world. It connects more than 190 countries of the world allowing is a free exchange of data and information at lightning fast speeds.

Now comes the question of how does this information flow on the internet? The basic function of the internet is to move computerized data from one place to another.

This happens as the internet is decentralized, i.e. not under any control. Every computer or device is an independent host and the information just moves from one host to another via the internet.

Let us learn some important terms related to the internet

- **WWW:** World Wide Web. This is what we call the web. It is a collection of information, data, videos, pictures, multimedia etc on the internet. It is all linked together through the world wide web.
- **URL:** It stands for Universal Resource Locator. This is the link that connects the user to the remote locator on the world wide web. It is basically a link to a website, which opens when you click on the URL.
- **Host:** Any computer or device that is used to transfer the data
- **IP Address:** IP Address is a unique code for each computer or device that connects to the internet. It is four numbers between 0 and 255 separated by a dot. Example 23.187.09.65

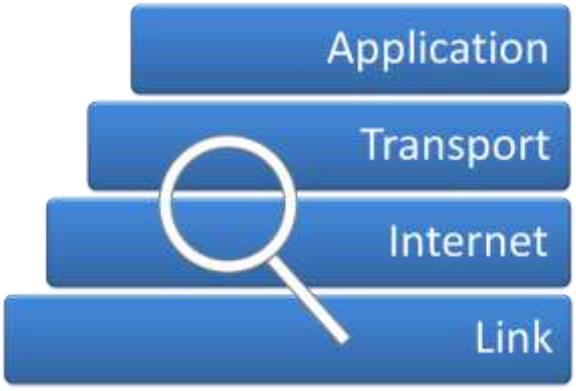

What are Internet Protocols?

The internet is a massive networking infrastructure. So there have to be some rules that regulate such a network. So internet protocols are a set of regulations and protocols that define and govern the format of the data that is sent via the internet. It is the method by which the data is sent over from one host to another.

When you send data over the internet this data is divided into smaller packets. Each packet contains the senders and the receivers IP address.

These packs first go to the gateway computer which reads the destination address and forwards it to the adjacent gateway. The next gateway will also do the same until the packet ultimately reaches its destination address.

Let us take a look at some of the important types of internet protocols:

- TCP: Transmission Control Protocol. This is the protocol for communicating over a network. The data is broken down into smaller packets, identifiable by their IP address.
- FTP: File Transfer Protocol. Used for transferring files over the internet. This includes text and multimedia files as well. It is faster than the other methods.
- HTTP: Hypertext Transfer Protocol. It follows the client and server model. It facilitates the connection between web client and web server.

Practice Questions for You

Q: ____ manages the transmission of outgoing mail?

a. SMTP
b. FTP
c. HTTP
d. None of the above

Ans: A

Q: Who invented the world wide web?

a. Bill Gates
b. Alan Tuning
c. Tim Bernes Lee
d. None of the above

Ans: C

Q: _____ allows storing and making web pages available

a. Domain Name
b. Porting
c. Web Hosting
d. None of the above

Ans: C

How are hardware and software connected to each other?

As discussed above both are interconnected with each other. You cannot use one without the other. Hardware cannot be used without a supporting software and vice versa. It is important to have the relevant software installed on your hardware to get the job done. Software development is considered expensive as it needs the regular updates and is a continuing process. Hardware can be initially expensive but after that, there are no expenses. There is the only one-time expense in hardware.

You can run different software programs on the same hardware. The software is required because it acts as an interface between the hardware and the user. You can say that hardware is the soul of the computer while the software is the heart of the computer. Both complement each other.

Practice Questions

Q. What is processed data is?
A. Input B. Output
C. Data D. None of these
Answer: B

Q. Full form of DTP?
A. Desktop publisher B. Differential protocol
C. Dot-matrix printing D. Desktop publishing
Answer: D

Q. What type of memory is RAM?
A. Main B. Internal
C. External D. Auxillary
Answer: A

Q. Out of the following keys which are not on the number pad?
A. Enter B. Ctrl
C. Del D. Num lock
Answer: B

Q. _____ manual instructs you on how to use a software.
A. Documentation B. Help
C. Technical D.User
Answer: D

Practice Questions

Q. The pattern of the printed line that appears on the products are known as _____
A. OCR B.Scanners
C. Barcode D. Prices
Answer: C

Q. _____ limits the speed of the printer.
A. Cartridge used B.Paper's length
C. Movements of paper D. All of the above
Answer: A

Q. _____ is the term used to define all output and input devices in the computer system?
A. Software B.Hardware
C. Monitor D. None of the above
Answer: B

Q. What can you do with the help of output devices?
A. Scan the data B. Input the data
C. Store the data D. Print or view the data

Answer: D
Q. Out of the following options which device is not an output device?
A. Scanner B. Printer
C. Plotter D. Monitor
Answer: A
Q. A digital camera is a _____ type of device.
A. Output B. Software
C. Input D. Storage
Answer: C

Number Systems

You have heard of number systems like the whole numbers, the real numbers etc. But in the context of computer awareness, we define other types of number systems like the binary number system, the decimal system, the hexadecimal system and others. We will discuss the binary number system and others and how we can convert from one number system to the other

Binary Numbers & Number Systems

Machine language is binary. This means that the machine language has binary values or two values, the combination of which represents the data. These two states are *"on"* state represented by 1 and *"off"* state, represented by *"0"*. Let us start with the more familiar number system, the one where we use the numbers 0 to 1.

Decimal Number System

In this number system, the numbers 0 to 9 represents numbers. We call it a decimal system because when we write the decimal (base 10) numbers, we use a positional notation system. Each digit is multiplied by an appropriate power of 10 depending on its position in the number. For example
786 is written as 7 103 + 8 102 + 6 100.

Binary Number System

The binary number system is also a positional notation numbering system, but in this case, the base is not ten but is instead two. Each digit position in a binary number represents a power of two. When we write a binary number, each binary digit is multiplied by an appropriate power of 2 which is based on their position in the number.
For example: 101101 = 1 x 25 + 0 x 24 + 1 x 23 + 1 x 22 + 0 x 21 + 1 x 20
= 1 x 32 + 0 x 16 + 1 x 8 + 1 x 4 + 0 x 2 + 1 x 1
= 32 + 8 + 4 + 1
In the binary number system, there are only two possible values that can appear in each digit position rather than the ten that can appear in a decimal number. Only the numerals 0 and 1 are used in binary numbers.

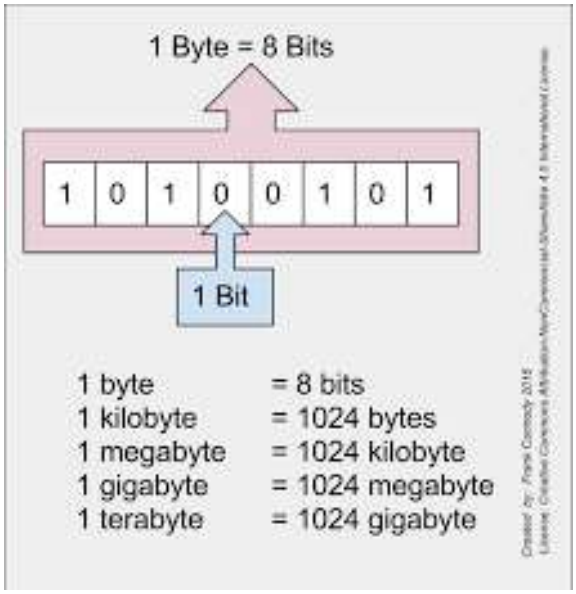

Bit

The term ‘bit’ is a contraction of the words ‘binary’ and ‘digit’. It is necessary to talk about the number of bits used to store or represent the number. This merely describes the number of binary digits that would be required to write a given number or information. The number in the above example is a 6-bit number as it has 6 binary digits (0s and 1s).

In terms of the computer language or the binary language, a bit is either a *0* or a *1*. In other words, each 0 or 1 in a machine language forms a bit. A group of 8 bits like 01100001 is a byte. So a bit is the smallest unit of memory or instruction that can be given or stored on a computer. Combination of bytes comes with various names like the kilobyte. One kilobyte is a collection of 1000 bytes. Normally a word or letter like ‘A’ or ‘G’ is worth 8 bits or one byte. One thousand bytes make up a kilobyte (one thousand letters approximately). 1024 kilobytes form a Megabyte (Mb) and so on.

Hexadecimal Numbers

In this number system, the base used is 16. So there are 16 digits used to represent a given number. This number system is called hexadecimal number system and each digit position represents a power of 16. The following are the hexadecimal numerals.

0, 1, 2, 3, 4, 5, 6, 7, 8, 9, A, B, C, D, E, F; the number system is supplemented by letters as the base is greater than 10. To take A, B, C, D, E, and F as part of the number system is conventional and has no logical or deductive reason. Since the base numbers for any number system that has more than 9 as its base will have to be supplemented, in the hexadecimal number system, the letters A to F are used.

Octal Number System

Octal number system uses numbers from 0 to 7 (i.e. 8 digits) and the numbers are as a base of 8. For example, $24 = 3\times81+0\times80 = 308$.

Example For You

Q 1 A number system uses 10 as the base (mod). A number is 654 in it. The LSB and MSB of this number are?

A) 6 and 4 B) 4 and 6 C) 0 and 1 D) 10 and 01.

Answer: Not fair! We do not know what LSB and MSB are. Well, let us see. MSB stands for the most significant Bit and the LSB stands for the Least Significant Bit. If you take a look at the number 654, we ought to represent it in a base 10 (Hexadecimal number system).

So we can write it as 6 103 + 5 102 + 4 100. Thus the number 6 is the most significant in a sense that it contains the bulk of the value of the number and the number 4 is the least significant bit

because it contains the least bulk of the value. Hence the answer is B that is 4 and 6. In general, we can say that in the hexadecimal representation, the number to the left is the MSB and the number to the right is the LSB.

Practice Questions

Q 1: How would you represent 23 in the binary number system?

A) 10111

B) 10101

C) 10001

D) 10110

Ans: A) 10111

Q 2: The LSB and MSB in the following number are: 1220

A) 1 & 0

B) 0 & 1

C) 10

D) 01

Ans: A) 0 & 1